0157_052

0016/0031

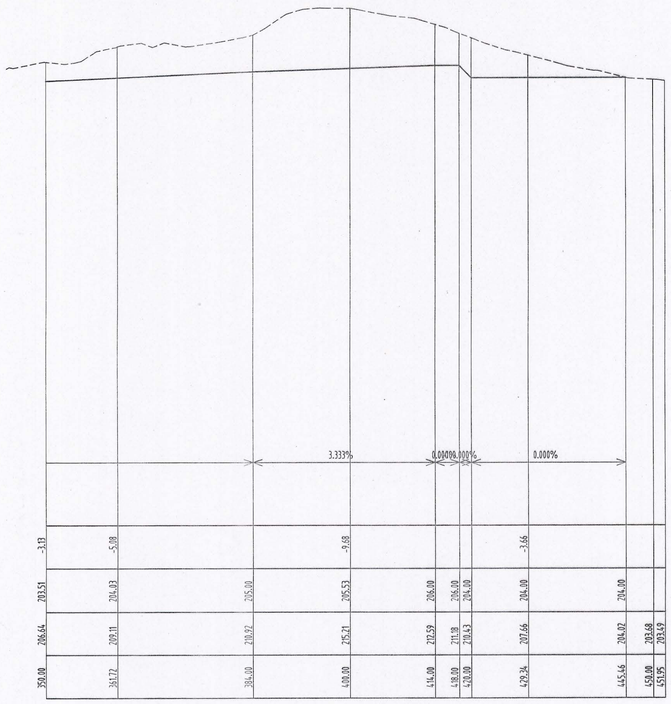

LONGITUDINAL SECTION SECONDARY SPILLWAY

SCALES HOR 1 : 500 VER 1 : 500

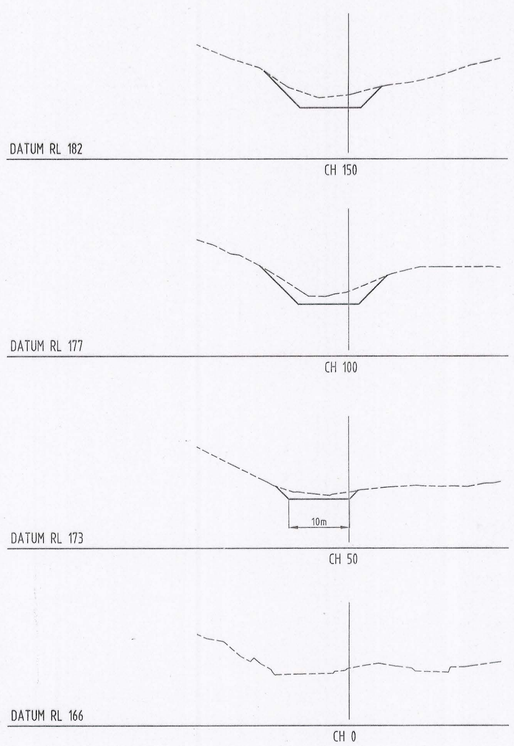

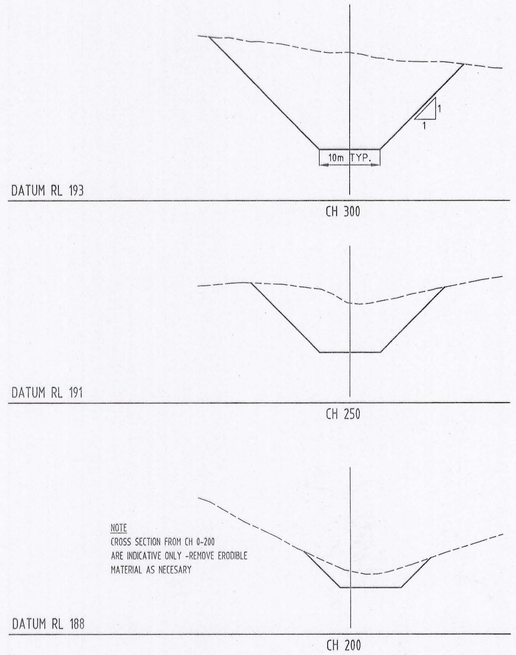

CROSS SECTIONS

SCALES HOR 1 : 500 VER 1 : 500

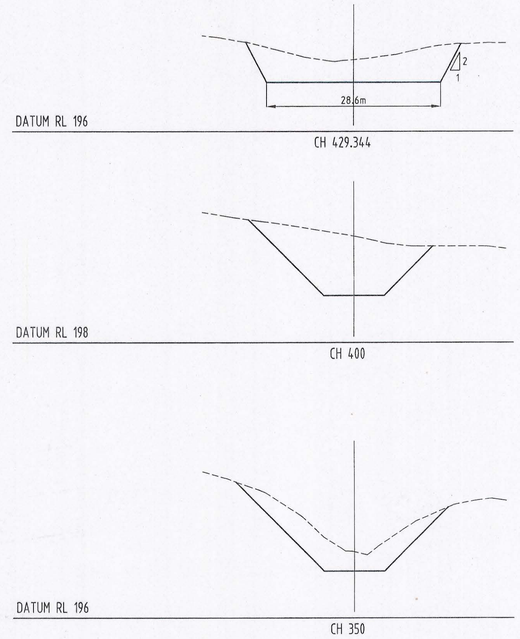

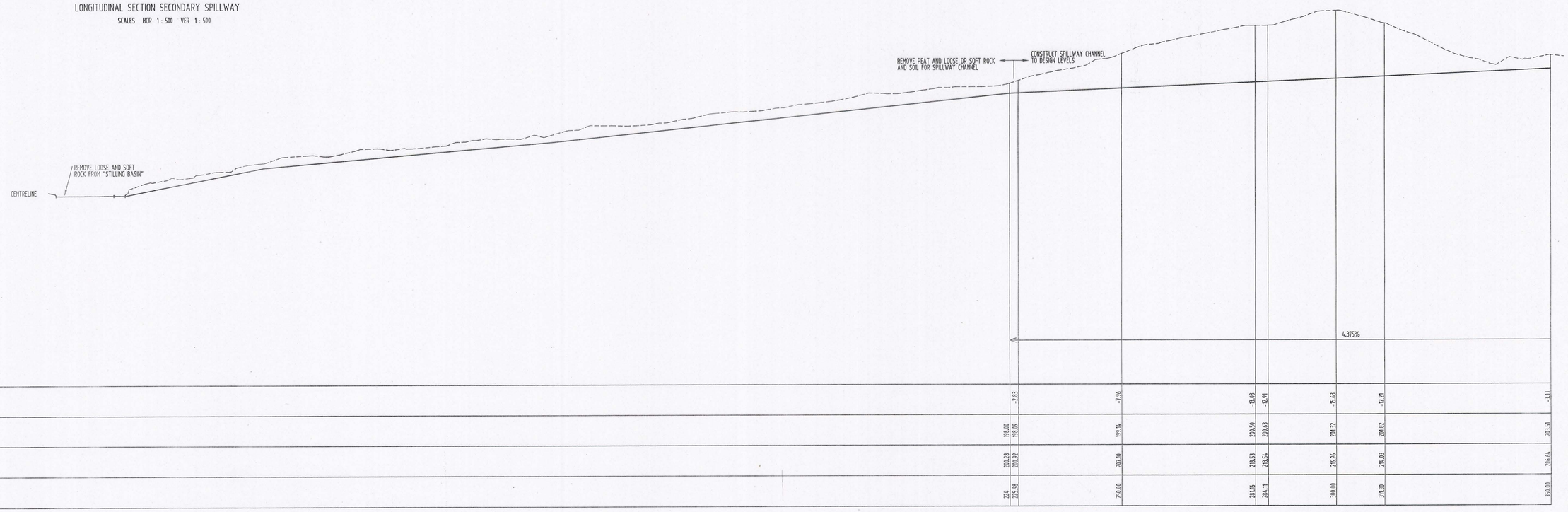

LONGITUDINAL SECTION SECONDARY SPILLWAY

SCALES HOR 1 : 500 VER 1 : 500

5 cm

Rev. No.	Description	Date
0	ISSUED FOR TENDER	9-9-'95

Thompson & Brett Pty. Ltd.
Consulting Engineers
7 Bayfield Street, Rosny Park. 7018
Phone (002) 446633 Fax. (002) 446221

Drawn B.W.	Date JULY '95	Scale 1:100 VER. 1:100 HOR.	
Approved		Director	
File CMT 04	Geocomp 1234		

Client & Project
COPPER MINES OF TASMANIA PTY LTD
MT LYELL MINE REDEVELOPMENT
TAILINGS MANAGEMENT STAGE 2

Drawing Title
PRINCESS CK. TAILINGS DAM LIFT 1a
SECONDARY SPILLWAY LONG. & CROSS SECTIONS

Drawing No. 95 - 1234 - 17 REV. 0