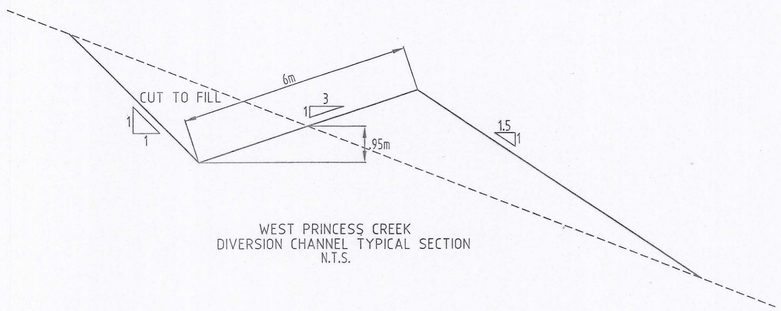

WEST PRINCESS CREEK
DIVERSION CHANNEL TYPICAL SECTION
N.T.S.

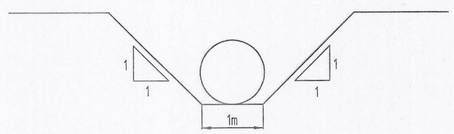

SECTION 2/-
SCALE 1:50

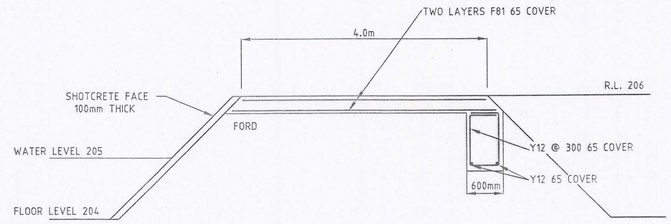

CONCRETE FORD DETAIL 1/16
SCALE 1:50

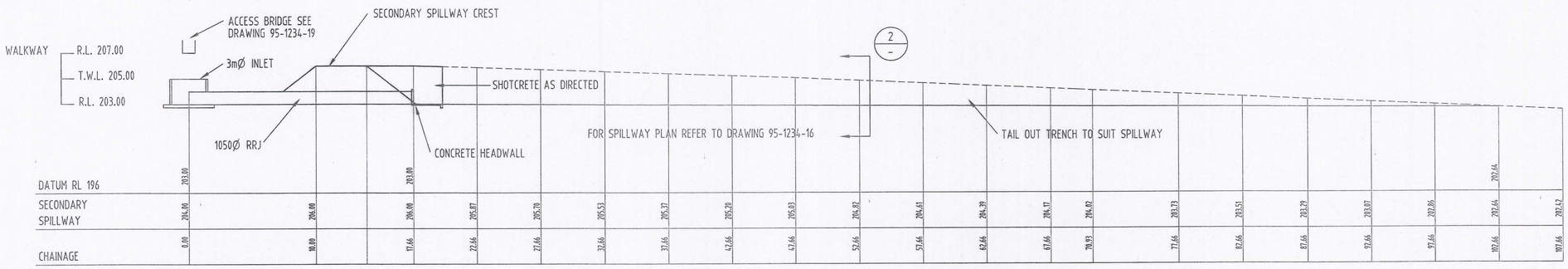

LONGITUDINAL SECTION SECONDARY SPILLWAY
SCALES HOR 1 : 200 VER 1 : 200

5 cm

Rev. No.	Description	Date
0	ISSUED FOR TENDER	8-8-'95

Thompson & Brett Pty. Ltd.
Consulting Engineers
7 Bayfield Street, Rosny Park. 7018
Phone (002) 446633 Fax. (002) 446221

Drawn B.W. | Date JULY '95 | Scale AS SHOWN
Approved Director
File CMT 04 | Geocomp 1234

Client & Project
COPPER MINES OF TASMANIA PTY LTD
MT LYELL MINE REDEVELOPMENT
TAILINGS MANAGEMENT STAGE 2

Drawing Title
PRINCESS CK. TAILINGS DAM LIFT 1a
SPILLWAY SECTION AND DETAILS

Drawing No. 95 - 1234 - 18 REV 0