05DM06-1005
0374_3584

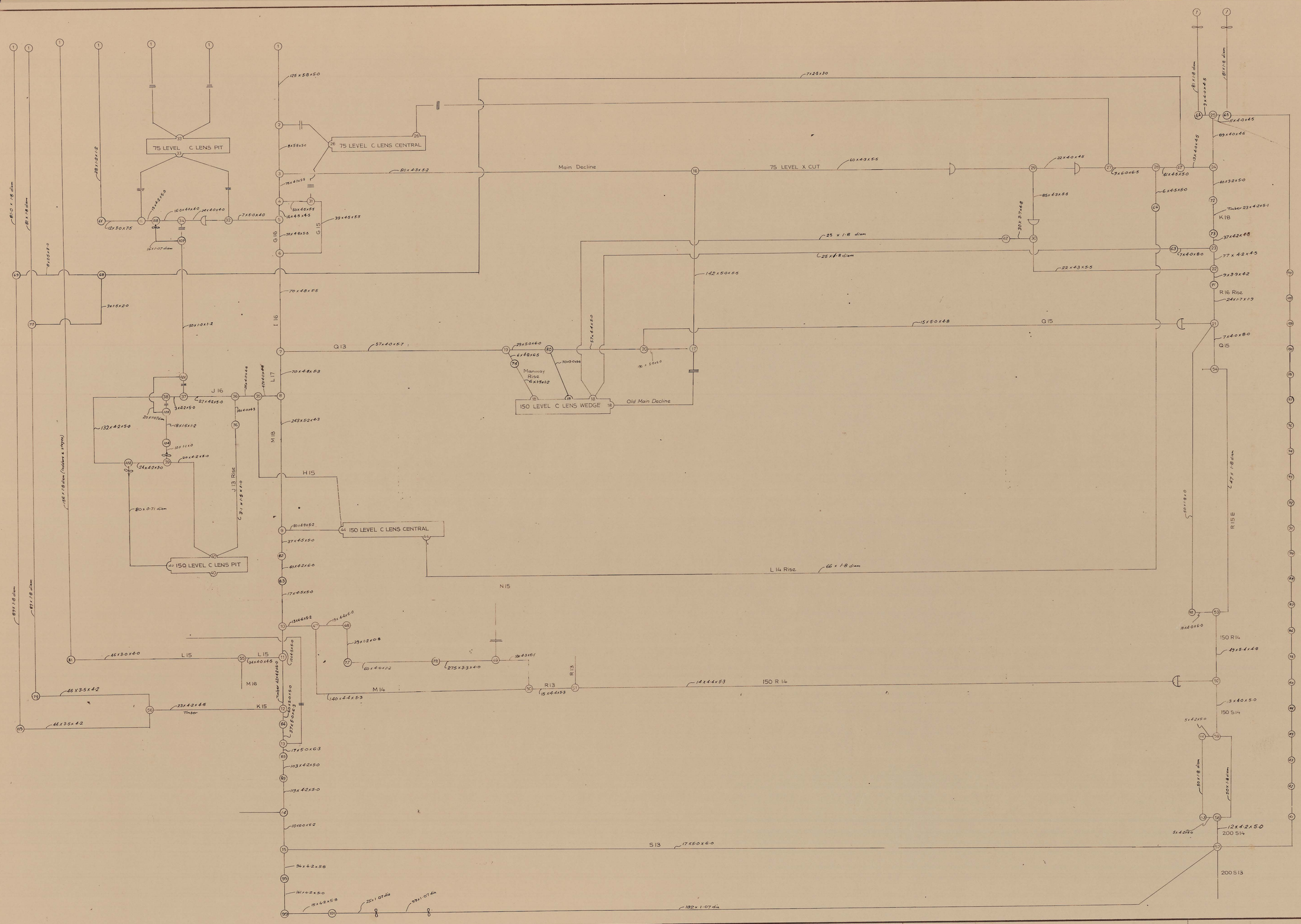

VENTILATION STATION NUMBER	CROSS SECTIONAL AREA m²																
1		9	27·7	17		25		33		41		49		57		65		73
2	28·8	10	27·0	18		26		34		42		50		58		66		74
3		11		19		27		35		43		51		59		67		75
4	24·10	12	24·7	20		28		36		44		52		60		68		76
5	29·1	13	23·2	21		29		37		45		53		61		69		77
6	23·0	14	22·9	22		30		38		46		54		62		70		78
7	22·0	15		23		31		39		47		55		63		71		79
8	20·9	16	17·2	24		32		40		48		56		64		72		80

Diagramatic

This data used to set up the GORDON computer for the initial runs

DOLPHIN MINE

VENTILATION CIRCUIT DIAGRAM
as at
JUNE '78

KING ISLAND SCHEELITE
GRASSY
KING ISLAND

05DM06 - 1005