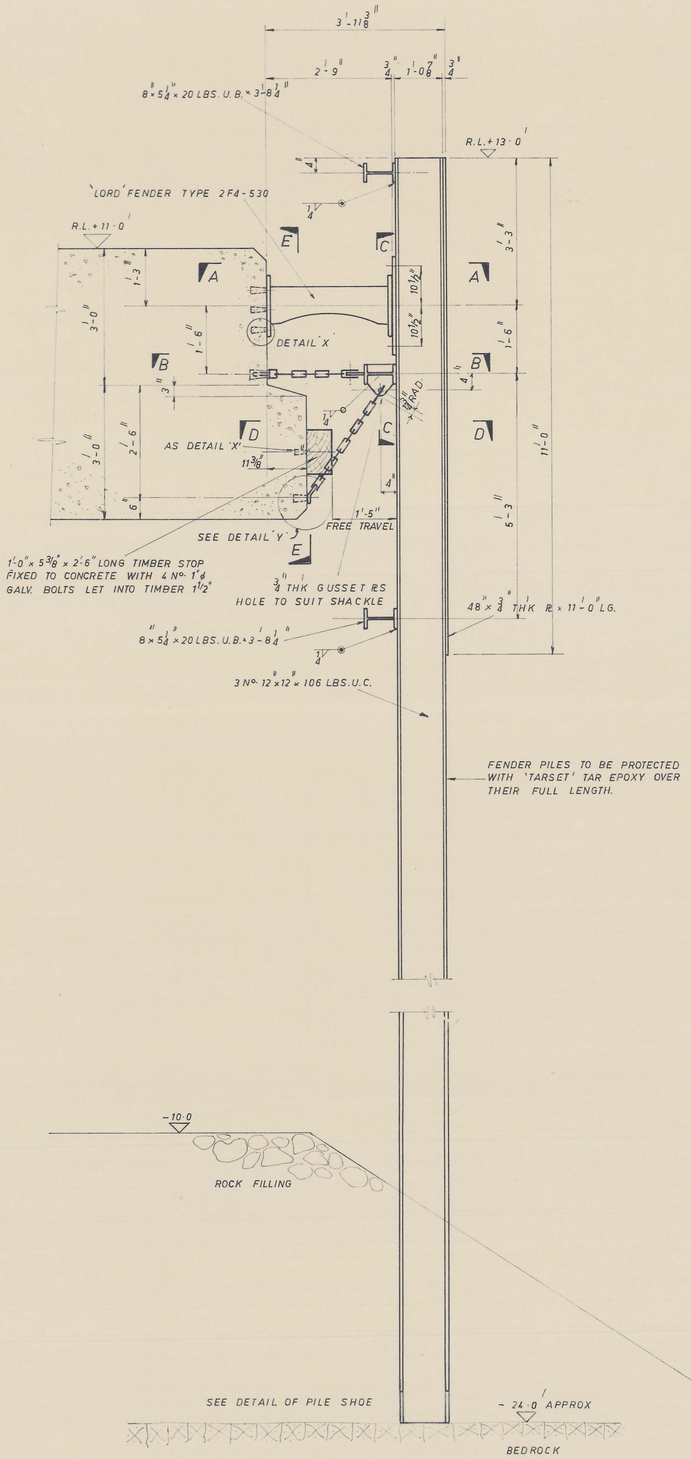


DETAIL OF STERN FENDER
1 No. REQ'D THUS & 1 No. REQ'D OPP-HAND

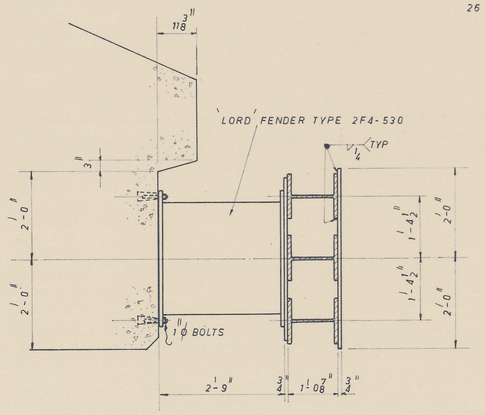


SECTION 'A-A'

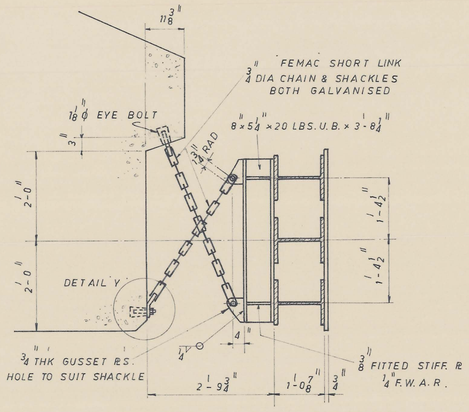


SECTION 'B-B'

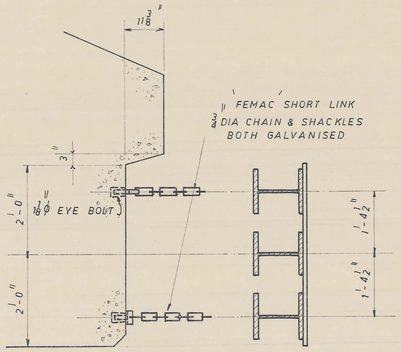


SECTION 'D-D'

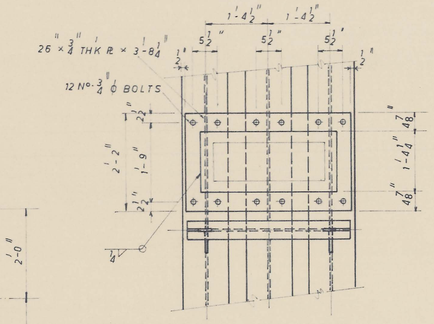


SECTION 'C-C'

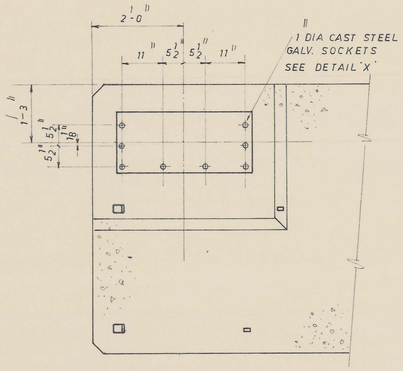


SECTION 'E-E'

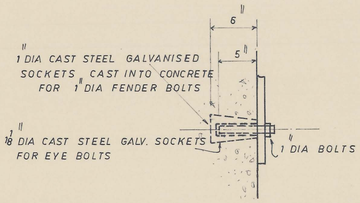


DETAIL 'X'
SIMILAR DETAIL FOR EYE BOLTS.

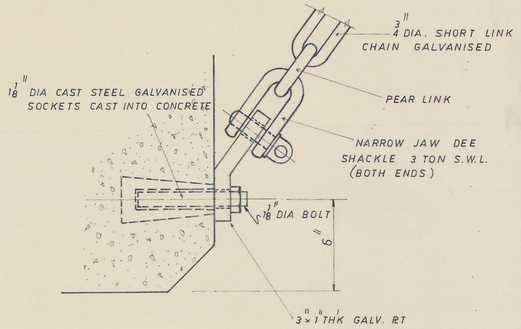


DETAIL 'Y'

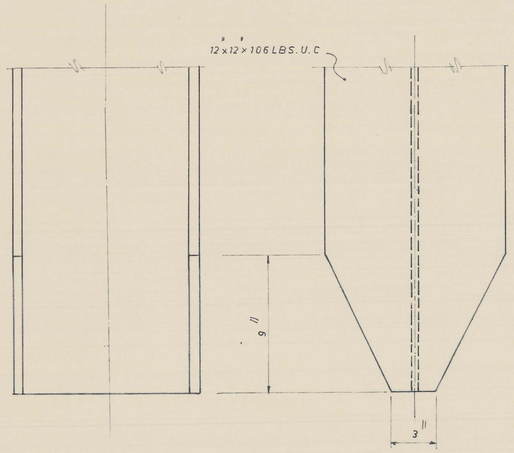


DETAIL OF FENDER PILE SHOE
SCALE: 3" TO 1 FT.

GENERAL NOTES:

SCALE:

JOHN HOLLAND (CONSTRUCTION) PTY. LIMITED

TENDER DRAWING ONLY
NOT FOR CONSTRUCTION USE

| REV. | DATE | DESCRIPTION |
|---|---|---|

KING ISLAND SCHEELITE LTD
PORT AT LITTLE GRASSY BAY

WHARF
STERN FENDER DETAILS

MAUNSELL & PARTNERS PTY. LTD.
CONSULTING ENGINEERS

SCALE: 3/4" TO 1 FT.
DATE: APRIL 1971
DATE OF ISSUE: 16 APR 1971
A.C. N.N. K.A.B.

DRG. No. 2070/211.