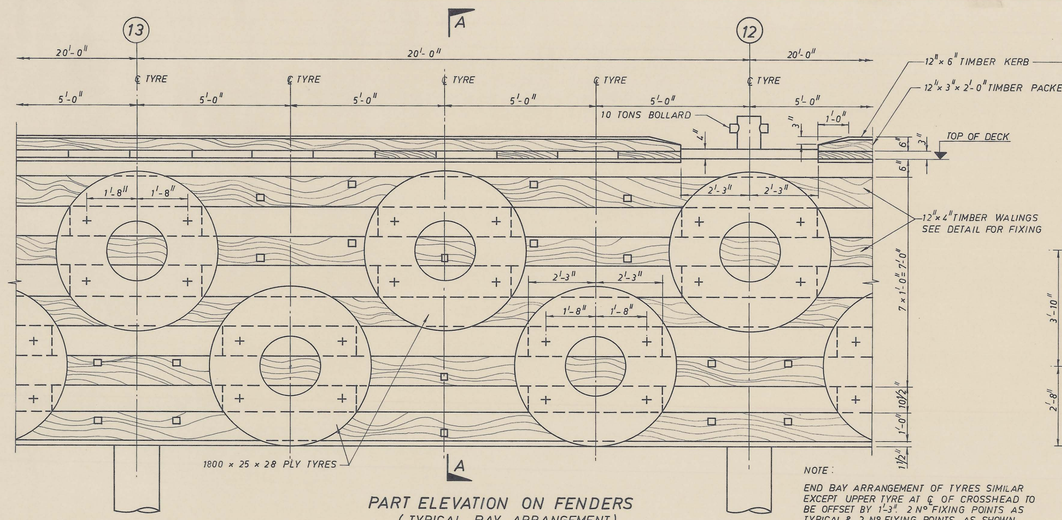

PART ELEVATION ON FENDERS
(TYPICAL BAY ARRANGEMENT)
SCALE 1/2" TO 1'-0"

NOTE:
END BAY ARRANGEMENT OF TYRES SIMILAR EXCEPT UPPER TYRE AT ℄ OF CROSSHEAD TO BE OFFSET BY 1'-3". 2 Nº FIXING POINTS AS TYPICAL & 2 Nº FIXING POINTS AS SHOWN ON DETAIL 'X'

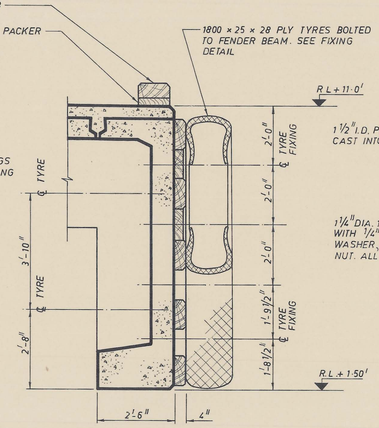

SECTION A-A
SCALE 1/2" TO 1'-0"

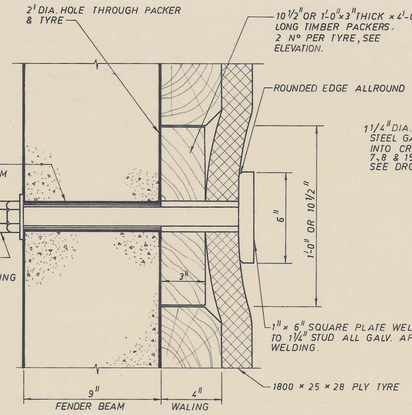

TYPICAL FIXING DETAIL OF TYRE
SCALE 3" TO 1'-0"

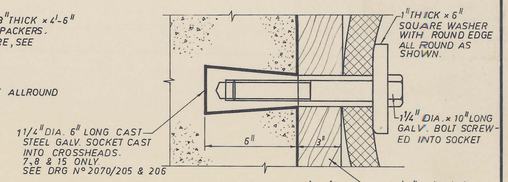

DETAIL 'X'
SCALE 3" TO 1'-0"

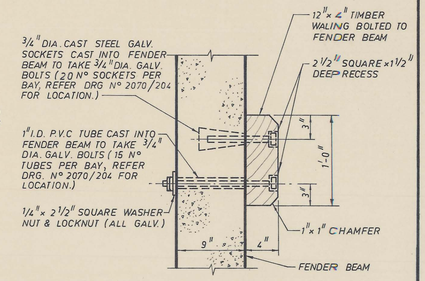

WALING FIXING
SCALE 1 1/2" TO 1'-0"

FENDER DETAILS

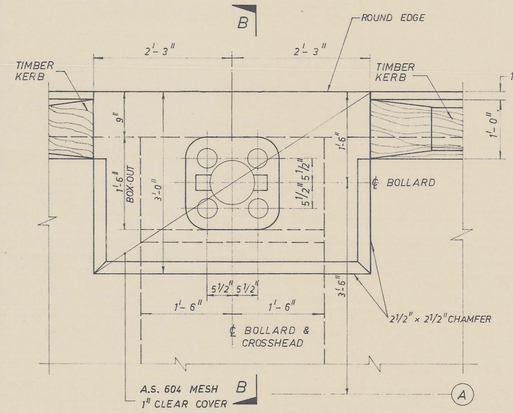

PLAN
(BOLLARDS : A3, A7, A8, A10, A12 & A15)

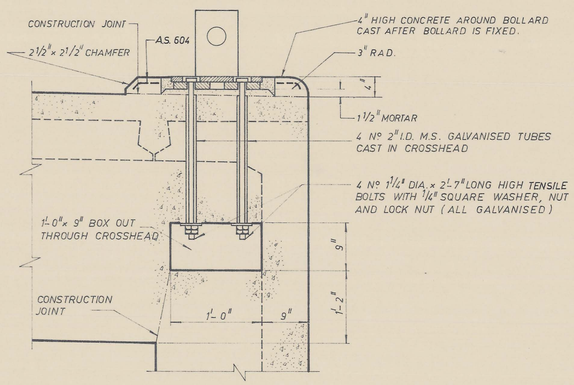

SECTION B-B

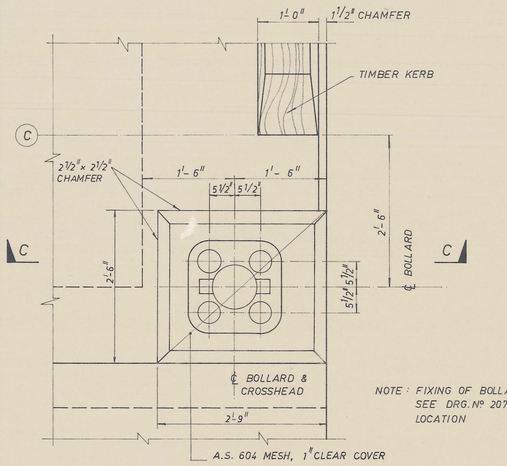

NOTE: FIXING OF BOLLARD B2 SIMILAR SEE DRG. Nº 2070/203 FOR LOCATION

PLAN
(BOLLARD C15)

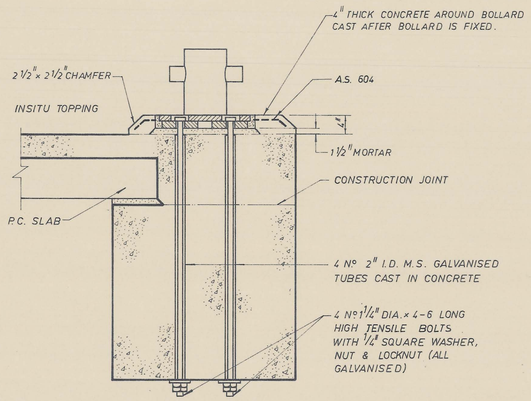

SECTION C-C

FIXING DETAILS OF 10 TONS BOLLARD
SCALE : 1" TO 1'-0"

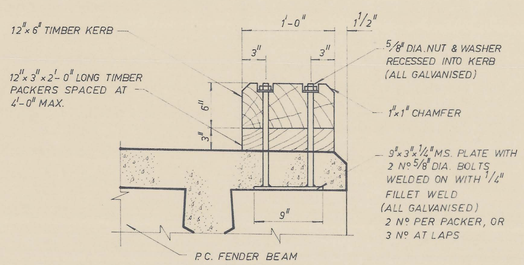

FIXING

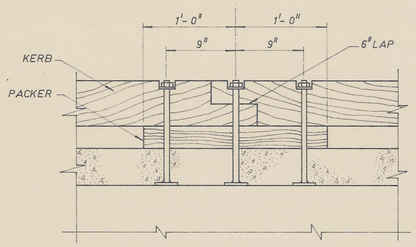

LAPPING

NOTE:
FIXING OF KERB OVER CROSSHEAD IS SIMILAR, EXCEPT PLATE WITH BOLTS TO BE WIRED TO REINFORCING & TRIM BOLTS IF REQUIRED

KERB DETAILS
SCALE : 1/2" TO 1'-0"

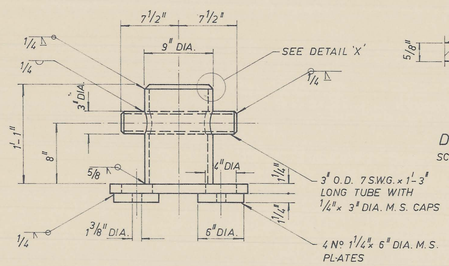

ELEVATION

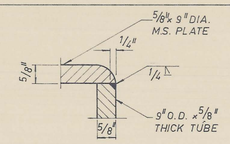

DETAIL 'X'
SCALE : 6" TO 1'-0"

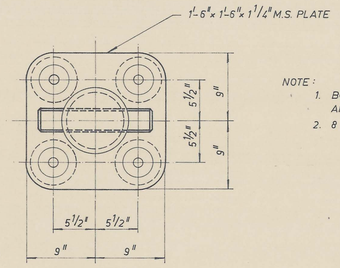

NOTE:
1. BOLLARD TO BE GALVANISED AFTER FABRICATION
2. 8 Nº REQUIRED

PLAN

SCALE :

GENERAL NOTES:
SEE DRG Nº 2070/101 FOR GENERAL DRAWING REFERENCE

TENDER DRAWING ONLY
NOT FOR CONSTRUCTION USE

REV.	DATE	DESCRIPTION

KING ISLAND SCHEELITE LTD.
PORT AT LITTLE GRASSY BAY

WHARF
WHARF FENDERS, BOLLARDS AND KERB

MAUNSELL & PARTNERS PTY. LTD.
CONSULTING ENGINEERS

SCALE : AS SHOWN
DATE : APRIL 1971
DATE OF ISSUE 16 APR 1971
I.B. N.W. K.B.B.

DRG. No. 2070/212