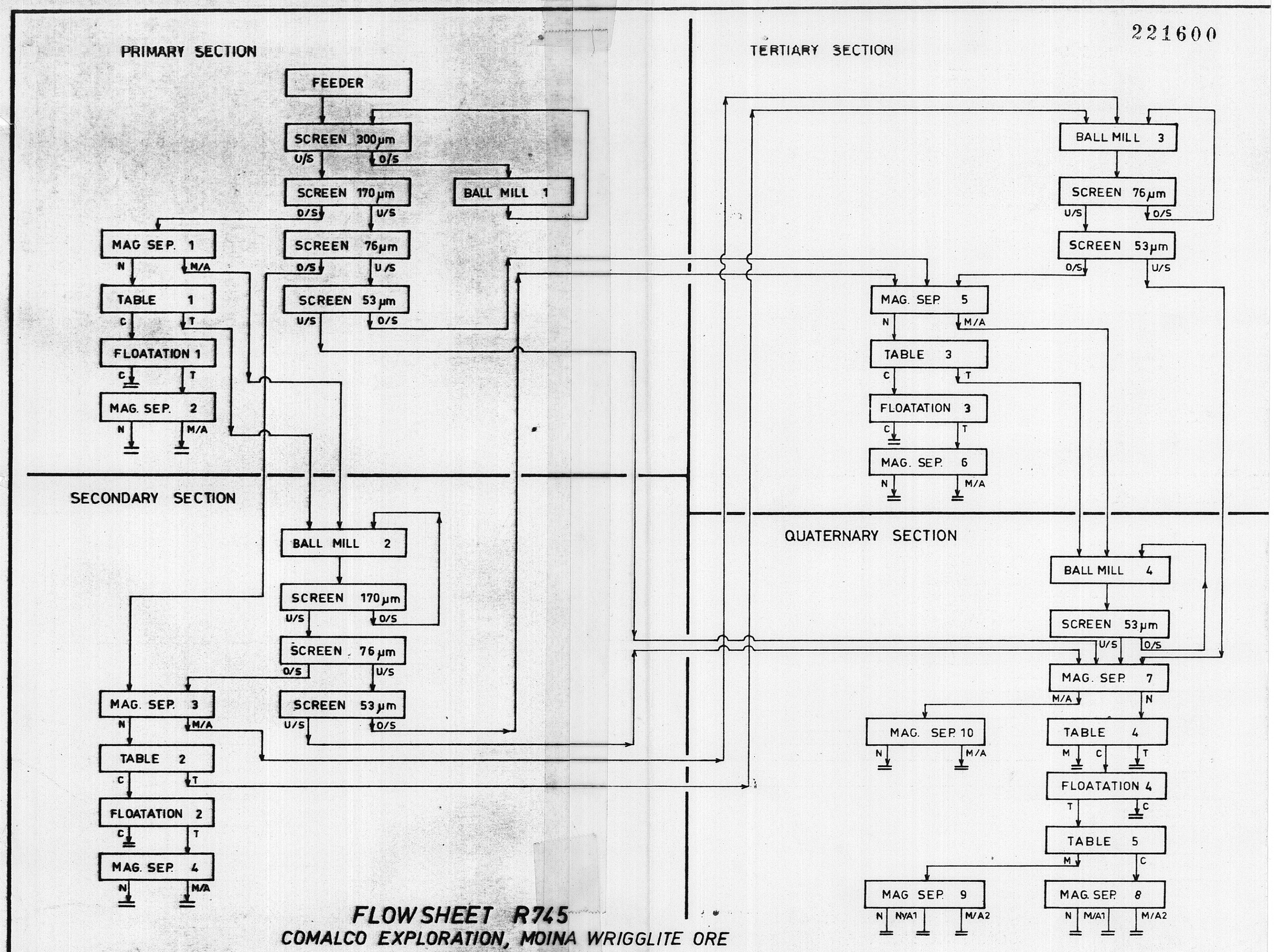

FLOWSHEET R745

COMALCO EXPLORATION, MOINA WRIGGLITE ORE